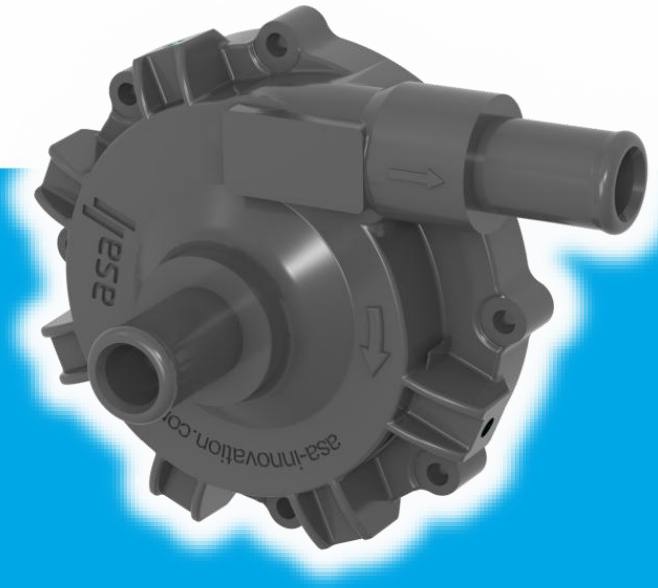


# Fluid Controls

## Centrifugal Water Pump Unit
## 12V/24V DC

**be different.**
**make a difference.**

# Fluid Controls

## Centrifugal Water Pump Unit 12/24V

## Design



The *asa* water pump operates on the centrifugal principle and uses a spiral housing with 1" or ¾" hose connections, magnet coupling and a 12V or a 24 V DC brushless motor. The motor and the coupling are installed in an aluminium die cast housing. This motor/pump unit is mainly designed to create compact and cost efficient cooling circuits for electric devices such as battery packs, electric motors and power electronics like converters.

## Advantages

- Optimized flow characteristics for high efficiency.
- Even distribution of the coolant in the system.
- Minimization of pressure losses and maximization of delivery capacity.
- High efficiency and lower energy consumption.
- Long service life thanks to wear-free operation.
- Reduced maintenance costs thanks to brushless design.
- High strength and durability.
- Good protection against mechanical damage and environmental influences.
- Space-saving design for easy integration.

## Validation plan:

- ✓ Water pump test
- ✓ Salt spray chamber according DIN EN ISO 9227
- ✓ Sound Power Measurement according to DIN EN ISO 9614-2
- ✓ Vibration test acc. IEC 60068-2-6/64 and combined climate test bench IEC 60068-2-14

## Applications



# Fluid Controls
## Centrifugal Water Pump Unit 12/24V

## Order Code

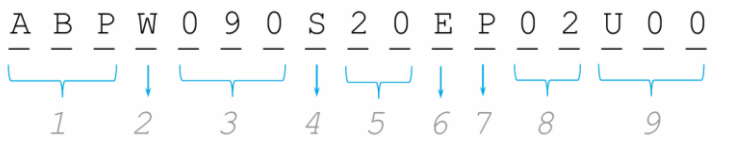


**1 Product Category**

| | |
|---|---|
| ABP | Pumps |

**2 Product Series**

| | |
|---|---|
| W | water pump |

**3 Displacement volume**

| | |
|---|---|
| 090 | 24 GPM |

**4 Connection**

| | |
|---|---|
| S | standard motor/pump |

**5 Dimensions**

| | |
|---|---|
| 20 | ¾ “ |
| 25 | 1” |

**6 Sealing Material (medium side)**

| | |
|---|---|
| E | EPDM |
| H | HNBR (on request) |
| V | FPM (Viton) (on request) |

**7 Control**

| | |
|---|---|
| P | PWM |

**8 Voltage**

| | |
|---|---|
| 01 | 12 V |
| 02 | 24 V |

**9 Index / Customized**

| | |
|---|---|
| U00 | standard US sales kit |
| U01 | mounting option picture 1, page 6 |
| U02 | mounting option picture 2, page 6 |
| Uxx | special / customized specifications; to be advised by asa |

## Pump Characteristic

**Pressure rise vss. flow 13,6V, Medium: Water, 68°F**

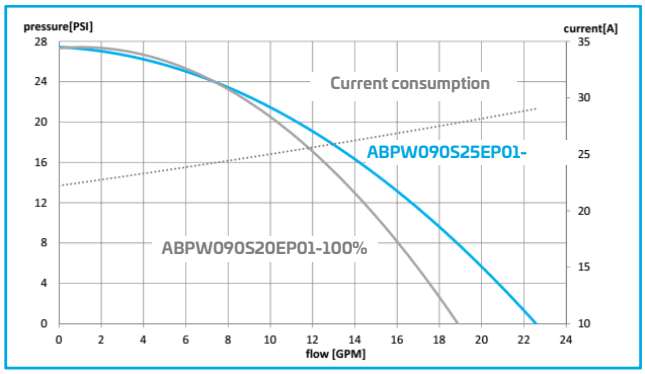


**pressure rise vs. flow 27,2 V, medium: water, 68°F ***

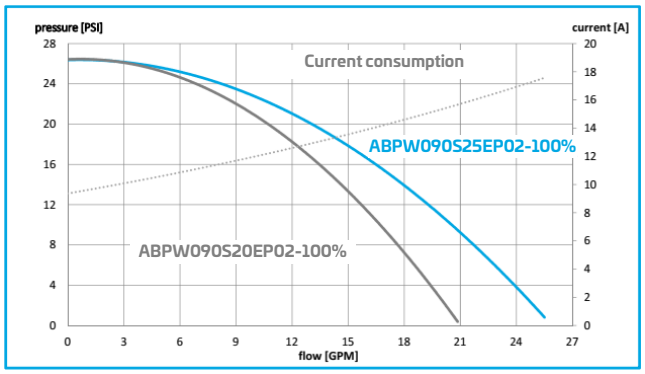


*) Tested and verified according *asa* standards on *asa* bench.

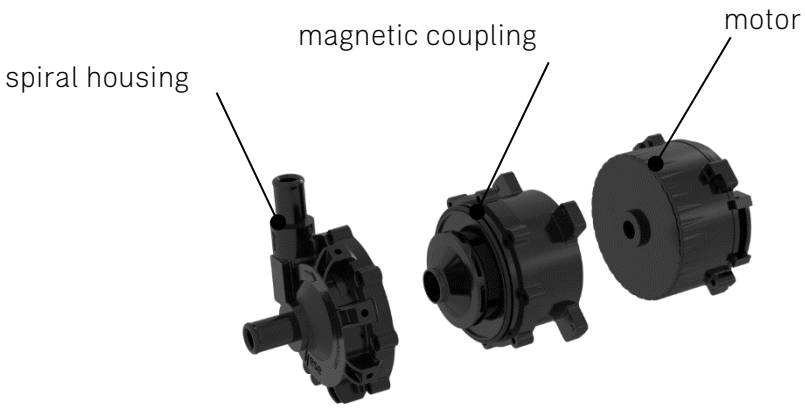

# Fluid Controls
## Centrifugal Water Pump Unit 12V

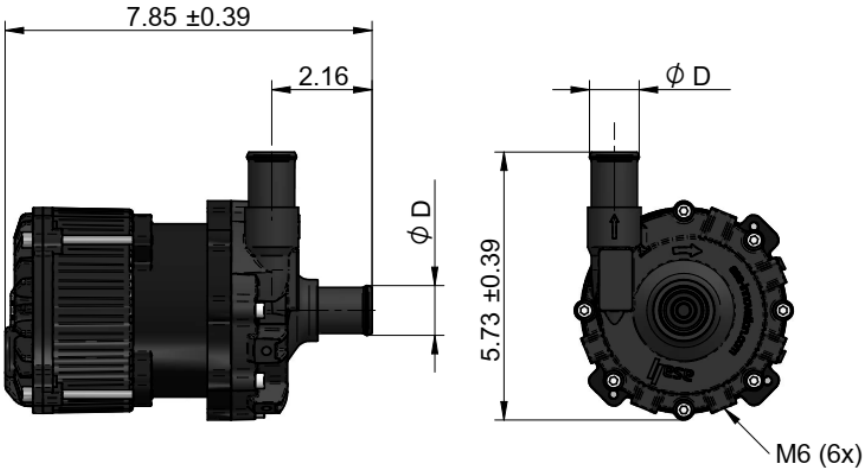


**Pump Connector:**
**Delphi Metri Pack**
**150/480 7 Way**
**Sealed Male Connector**

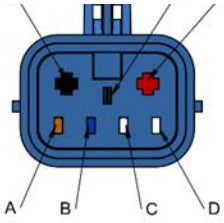


| PIN | color | function |
|---|---|---|
| A | orange | reserved, not used |
| B | blue | PWM input |
| C | white | fault feedback output |
| D | - | - |
| E | red | 12V |
| F | - | - |
| G | Black | GND |

## Technical Data

| order number | description | fuse | protection | flow rate | motor type | ØD | weight |
|---|---|---|---|---|---|---|---|
| | | [A] | | [GPM] | | | [lbs] |
| ABPW090S20EP01U00 | Water pump 24 GPM ¾“ 12V EPDM | 35 | IP68 | see charts page 3 | brushless | ¾” | 7.0 |
| ABPW090S25EP01U00 | Water pump 24 GPM 1“ 12V EPDM | 35 | IP68 | | | 1” | 7.0 |

## Specification

| | |
|---|---|
| operating supply voltage range | 9-16V |
| max. current | 31A |
| housing an cover material | aluminium |
| sealing material (fluid side) | EPDM |
| working temperature range | -40°F to +248°F (pump flow derated between +185°F and +248°F) |

## Features

| | |
|---|---|
| adjustable flow rate | PWM signal |
| diagnostic output | PWM signal |
| medium to be pumped | water & water-gycol |

## Connector Counterpart kit

| | |
|---|---|
| connector type | Delphi Metri Pack (optional mating connector order number: **ESMPWP12K**) |

## Duty cycle

| Duty cycle: | Definition: |
|---|---|
| 40% | Pump is running dry |
| 50% | Over current |
| 70% | Over temperature |
| 80% | Under- and Over voltage |
| 100% | No error |

This data sheet and the corresponding technical drawings serve solely as a general guideline and a technical overview of our products. Please contact us for additional information. We always try to keep the technical data up to date. However, due to constant development, no guarantee can be given for the correctness of the information (or printing errors). This applies to general properties such as dimensions, colors and weight. Any cooling performances and general technical values indicated in this catalogue are measured at a test benches according to asa testing procedures or calculated based on such tests and may therefore deviate from values obtained by test procedures from other manufacturers. The performance can vary by around +/- 15%. All information and calculation values are provided to the best of our knowledge, they do not represent intrinsic product properties and it is strongly recommended that the product is tested under the actual operating conditions. All drawings shown here are to be understood as schematic representations. For exact dimensions and the applicable tolerances, please ask for the corresponding scale drawings. Any form of liability is excluded for the information included in this datasheet. asa GmbH reserves the right to modify the product without any separate notification. This refers to both technical data and the product itself. Furthermore, it is herewith specified that the datasheet and the corresponding scale drawings are not a substitute for the assembly, installation and operating instructions.

# Fluid Controls

## Centrifugal Water Pump Unit 24V

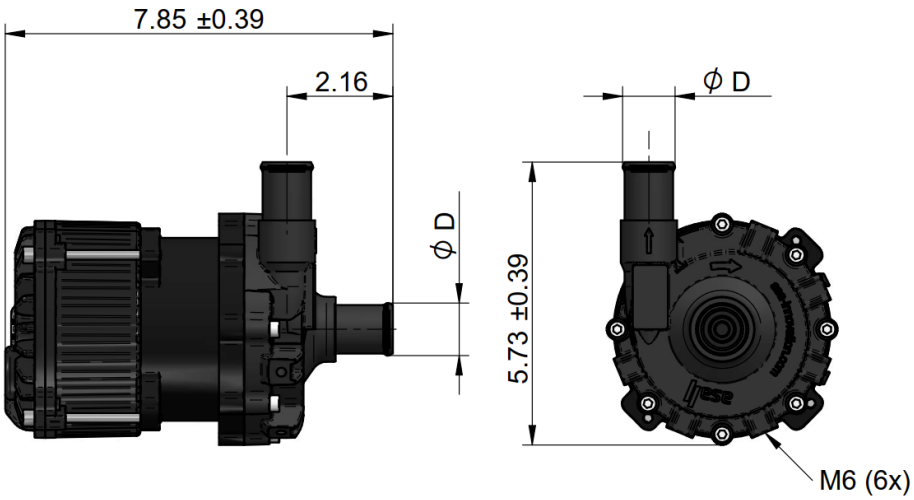


**Pump Connector:**
**Ducon 2.8 male, 6 Way**
**Sealed Male Connector**

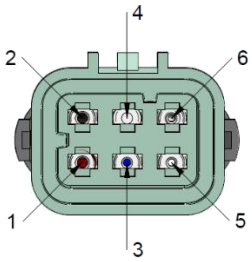


| PIN | function |
|---|---|
| 1 | 24V |
| 2 | GND |
| 3 | diagnostic (output) |
| 4 | reserved, not used |
| 5 | - |
| 6 | PWM (input) |

## Technical Data

| order number | description | fuse | protection | flow rate | motor type | ØD | weight |
|---|---|---|---|---|---|---|---|
| | | [A] | | [gpm] | | | [lbs] |
| ABPW090S20EP02U00 | Water pump 24 gpm ¾“ 24V EPDM | 25 | IP68 | see charts page 3 | brushless | ¾” | 7.0 |
| ABPW090S25EP02U00 | Water pump 24 gpm 1“ 24V EPDM | 25 | IP68 | | | 1” | 7.0 |

## Specification

| | |
|---|---|
| operating supply voltage range | 20-32V |
| max. current | 19A |
| housing an cover material | aluminum |
| sealing material (fluid side) | EPDM |
| working temperature range | -40°F to +248°F (pump flow derated between +185°F and +248°F) |

## Features

| | |
|---|---|
| adjustable flow rate | PWM signal |
| diagnostic output | PWM signal |
| medium to be pumped | water & water-glycol |

## Connector Counterpart kit

| | |
|---|---|
| connector type | Ducon 2.8 (optional mating connector order number: **ESDU6P2.8K**) |

## Safety process / Diagnostic output

| Duty cycle: | Definition: |
|---|---|
| 40% | Pump is running dry |
| 50% | Over current |
| 70% | Over temperature |
| 80% | Under- and Over voltage |
| 100% | No error |



This data sheet and the corresponding technical drawings serve solely as a general guideline and a technical overview of our products. Please contact us for additional information. We always try to keep the technical data up to date. However, due to constant development, no guarantee can be given for the correctness of the information (or printing errors). This applies to general properties such as dimensions, colors and weight. Any cooling performances and general technical values indicated in this catalogue are measured at a test benches according to asa testing procedures or calculated based on such tests and may therefore deviate from values obtained by test procedures from other manufacturers. The performance can vary by around +/- 15%. All information and calculation values are provided to the best of our knowledge, they do not represent intrinsic product properties and it is strongly recommended that the product is tested under the actual operating conditions. All drawings shown here are to be understood as schematic representations. For exact dimensions and the applicable tolerances, please ask for the corresponding scale drawings. Any form of liability is excluded for the information included in this datasheet. asa GmbH reserves the right to modify the product without any separate notification. This refers to both technical data and the product itself. Furthermore, it is herewith specified that the datasheet and the corresponding scale drawings are not a substitute for the assembly, installation and operating instructions.

## 1.) Mounting option U01

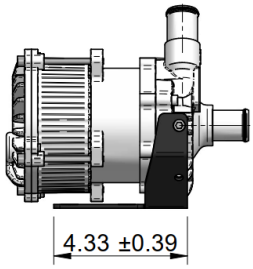

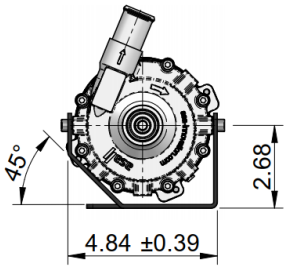


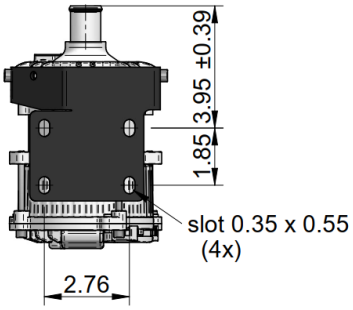




## 2.) Mounting option U02

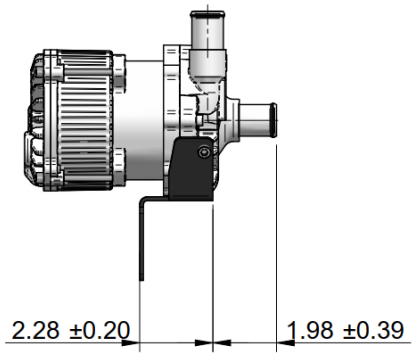


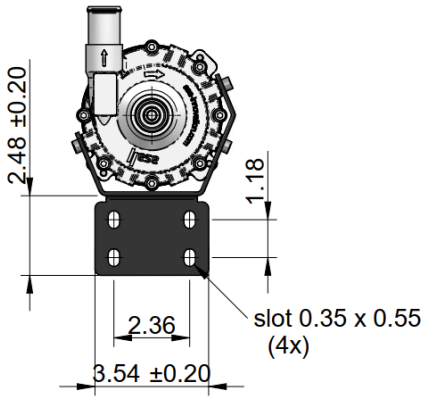


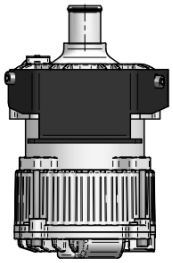

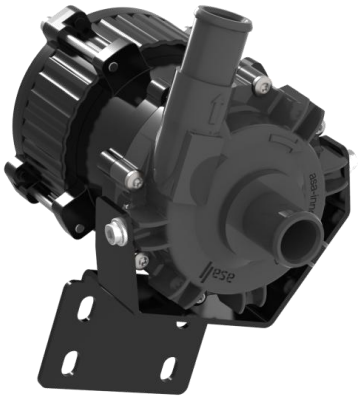

This data sheet and the corresponding technical drawings serve solely as a general guideline and a technical overview of our products. Please contact us for additional information. We always try to keep the technical data up to date. However, due to constant development, no guarantee can be given for the correctness of the information (or printing errors). This applies to general properties such as dimensions, colors and weight. Any cooling performances and general technical values indicated in this catalogue are measured at a test benches according to asa testing procedures or calculated based on such tests and may therefore deviate from values obtained by test procedures from other manufacturers. The performance can vary by around +/- 15%. All information and calculation values are provided to the best of our knowledge, they do not represent intrinsic product properties and it is strongly recommended that the product is tested under the actual operating conditions. All drawings shown here are to be understood as schematic representations. For exact dimensions and the applicable tolerances, please ask for the corresponding scale drawings. Any form of liability is excluded for the information included in this datasheet. asa GmbH reserves the right to modify the product without any separate notification. This refers to both technical data and the product itself. Furthermore, it is herewith specified that the datasheet and the corresponding scale drawings are not a substitute for the assembly, installation and operating instructions.

## Company

asa stands for innovations and reliable solutions that are already being used by our customers in various mobile and stationary applications. With over 40 years of experience in thermal systems, connection technology, and fluid control, we have become a global leader in advanced fluid power solutions. Our experience fosters progress to grant you competitive pricing, consistent product performance, and exceptional reliability.

## History

### 1980-1990

- Hydraulic components distribution, service and system integration
- Manufacture of valves and components
- Heat exchanger Shell & Tube platform "Silver ST80

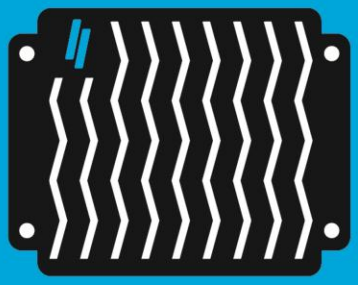

### Thermal Management Systems

Our heat exchangers are designed and produced with an innovative spirit and a passion for technology, ensuring highest performance and quality.

- Bar & Plate: oil and water/glycol coolers
- Tube & Fin: coolant cooler, silent pump, electronics cooler
- Shell & Tube

### 1990 - 2000

- Specializing on heat exchanger market
- Manufacture first modular cooler system in plate & bar "OKO" (2 brazing lines)
- Foundation of asa hydraulic of America Inc./ USA



### Ventilation & Drive

We offer a broad range of ventilation solutions. The installation space influences the choice of the most suitable airflow technology, thus ensuring the optimal configuration for volume flow, efficiency and noise reduction.

- Ventilation: adjustable fan blade systems
- Six phase sensorless VR-motor
- Electronic fan speed control, temperature control

### 2000 - 2010

- Foundation of asa Products Pty Ltd / Australia
- Foundation of asa Hydraulik Technology
- Patents:
  - AUC - 1st flexible connectors
  - ABP - 1st intergated bypass tube
  - ATT - asa extruded profil




### Fluid Controls

The asa gerotor pumps meet the demands of modern fluid power systems, while our centrifugal water pump units are designed primarily to create compact, cost-efficient cooling circuits for electric devices, such as battery packs and electric motors.

- Gerotor pumps
- Centrifugal water pumps

### 2010 - 2020

- New R&D Center / Austria
- Manufacture of water/oil pumps
- Foundation of asa heat exchanger Pvt. Ltd / India
- Patents:
  - x-changer "Fusion of heat exchanger & ventilation"
  - Multiaxial silent absorber



### Connection Technology

Our connection product collection fills technological gaps in various markets and applications.

- Silent absorbers
- Multi-axle vibration absorbers
- Expansion joints
- Hybrid SAE/DIN shut-off valves

### 2020 - today

- New technology of six phase sensorless VR-motors
- Manufacture ST heat exchanger
- Manufacture X wings (new lead fins)
- Foundation of asahydraulic do Brasil Pvt. Ltd /Brazil
- Patents:
  - META - microchannel with flexible lead fins
  - AHM - hybrid shell tube heat exchanger

**Thermal Systems**
**Connection Technology**
**Fluid Controls**




*asa group*
*R&D Center*
*Vienna / AUSTRIA*
*Tel.: +43 1 292 40 20*
*support@asahydraulik.com*





*asa technology*
*Produktions- und*
*Vertriebs GmbH*
*Vienna / AUSTRIA*
*Tel.: +43 1 292 40 20*
*support@asahydraulik.com*





*asa hydraulik*
*Technology*
*(Suzhou) Co., Ltd.*
*CHINA*
*Tel.: +86 512 6238 1988*
*suzhou@asahydraulik.com*





*asa hydraulik of*
*America*
*New Jersey / USA*
*Tel.: +1 800 473 94 00*
*Tel.: +1 908 541 15 00*
*sales_us@asahydraulik.com*





*asa Products Pty Ltd*
*Melbourne /*
*AUSTRALIA*
*Tel.: +61 3 9397 6129*
*melbourne@asahydraulik.com*





*asa heatexchangers*
*Pvt Ltd*
*Ahmedabad / INDIA*
*Tel.: +91 70 4390 7273*
*salesindia@asahydraulik.com*





*asa Hydraulik do*
*Brasil Ltda*
*Sao Paulo / BRAZIL*
*Tel.: +55 11 5026 8228*
*sales_brazil@asahydraulik.com*



***asa technology Produktions-***
***und Vertriebs GmbH***
*www.asa-innovation.com*
*www.asahydraulik.com*